NEWAY OIL EQUIPMENT

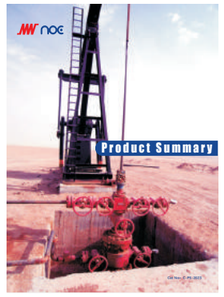


Product Summary

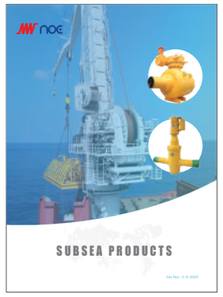


Subsea Products

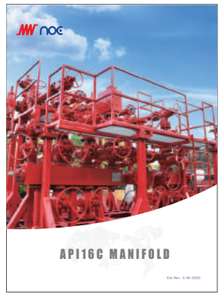


MANIFOLD

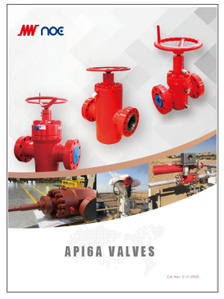


GATE VALVE

FRACTURING PRODUCTS

ACTUATOR

**To be a Global Leading Manufacturer of Flow Equipment**
**Complete Solutions for Smart High Pressure Flow Equipment**

**Neway Oil Equipment (Suzhou) Co., Ltd**
Address: No.999 Xiangjiang Road,
Suzhou New District, P.R.China
Tel: 0512-6708-1952
Email: noe@neway.com.cn
Website: www.newayoilequipment.com
Post: 215129

WEBSITE WECHAT

# API6A WELLHEAD& CHRISTMAS TREE

Cat No: C-WCT-2025

# Wellhead & Christmas Tree

| Production Specification Level |
|---|
| PSL1 |
| PSL2 |
| PSL3 |
| PSL3G |
| PSL4 |

| Performance Requirement Level |
|---|
| PR1 |
| PR2 |

| Material Class |
|---|
| AA |
| BB |
| CC |
| DD |
| EE |
| FF |
| HH |

| Working Pressure | psi | Mpa |
|---|---|---|
| 2M | 2,000 | 13.8 |
| 3M | 3,000 | 20.7 |
| 5M | 5,000 | 34.5 |
| 10M | 10,000 | 69 |
| 15M | 15,000 | 103.5 |
| 20M | 20,000 | 138 |

| Temperature Class | (°F) | (°C) |
|---|---|---|
| K | -75 to 180 | -60 to 82 |
| L | -50 to 180 | -46 to 82 |
| N | -50 to 140 | -46 to 60 |
| P | -20 to 180 | -29 to 82 |
| S | 0 to 140 | -18 to 60 |
| T | 0 to 180 | -18 to 82 |
| U | 0 to 250 | -18 to 121 |
| V | 35 to 250 | 2 to 121 |
| X | 0 to 350 | -18 to 180 |
| Y | 0 to 650 | -18 to 345 |

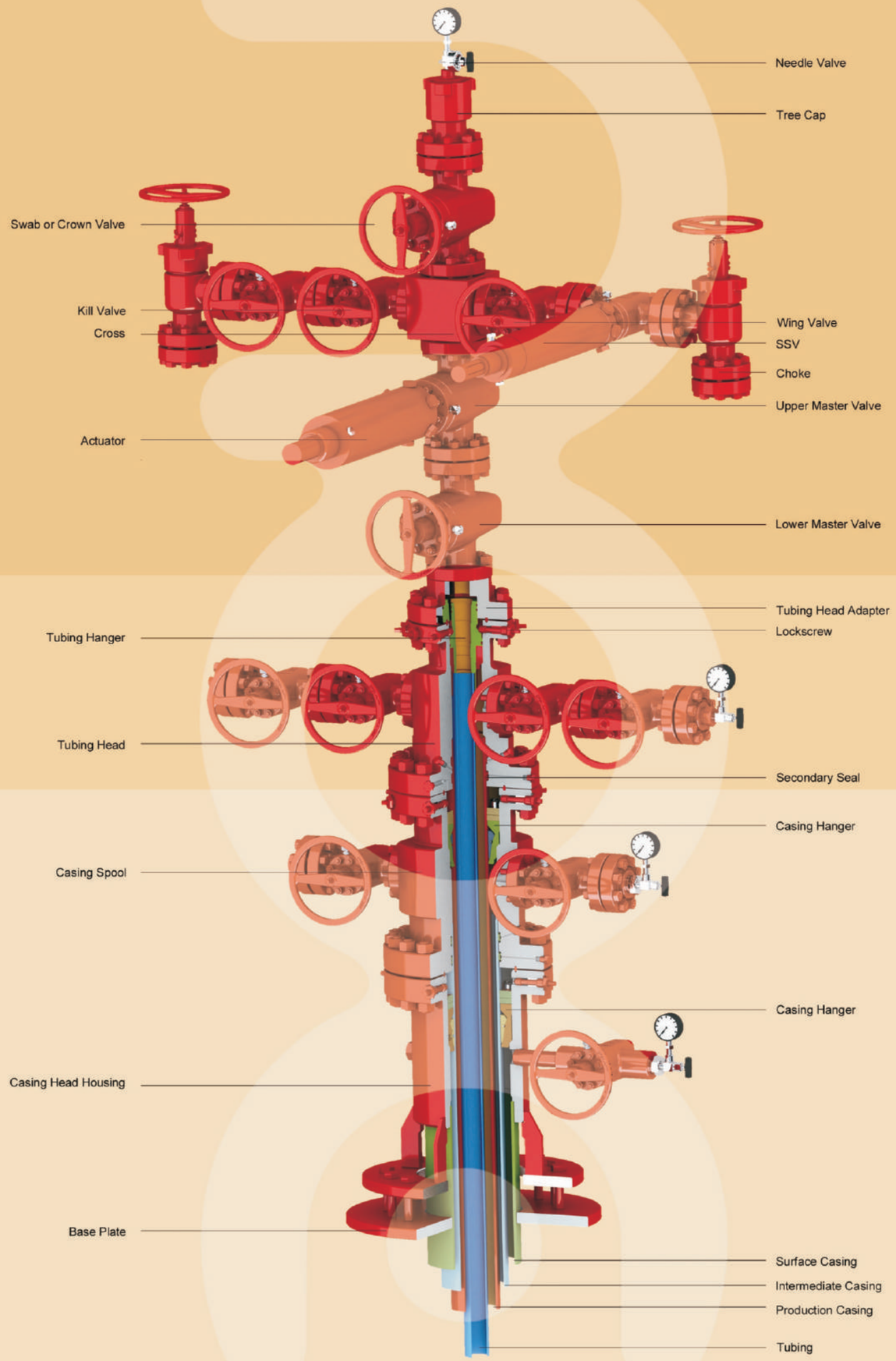

## Wellhead Components Sheet

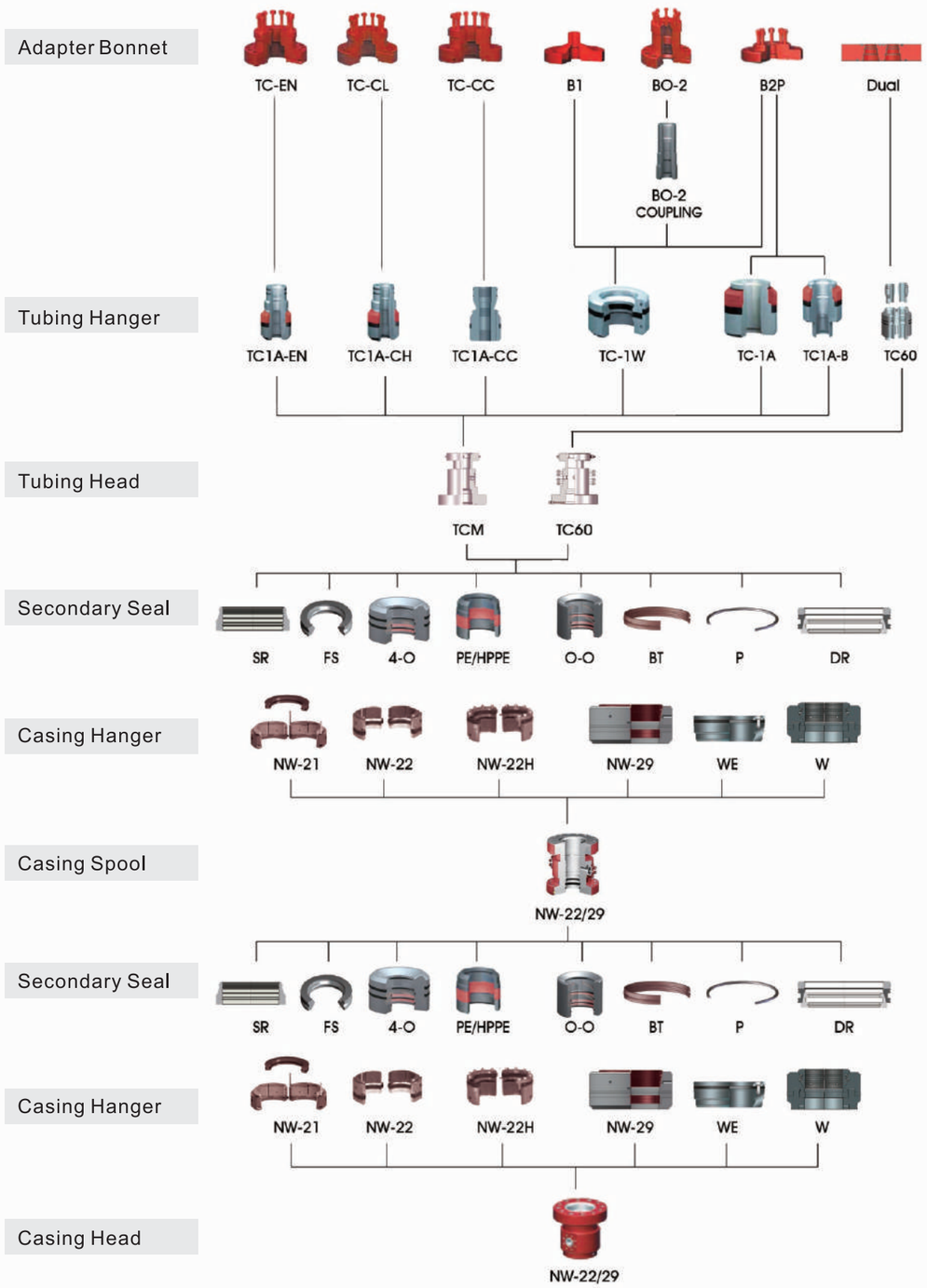

## NW22 Casing Head

NW-22 Casing heads have a straight bore bowl design which avoids damage to sealing areas by drilling tools and prevents test plug ang bowl protector wedging problems when pressure is applied . This straight bore design also reduces maintenance costs and allows suspension of heavy casing loads.NW-22 Casing heads provide interchangeability of casing hangers NW-21 and NW-22.If a bowl protector were required during the drilling process,using an NW-22-BP casing head including lock down screws in the upper flange would be recommended. Bottom connections can be furnished threaded or slip-on for welding.

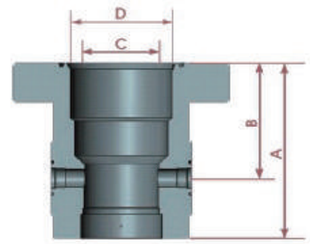

NW-22-BP Option

NW-22 Threaded Option

| Flange Size | Working Pressure | Casing Size | Outlets | A | B | C D | Weight | |
|---|---|---|---|---|---|---|---|---|
| in | psi | in | | in | in | in | in | lb |
| 11 | 3,000 | 8-5/8 | 2-1/16'' Std | 19 | 11 | 8 | 10-7/8 | 748 |
| 11 | 3,000 | 8-5/8 | 2'' LP | 17-7/8 | 11 | 8 | 10-7/8 | 600 |
| 11 | 5,000 | 8-5/8 | 2-1/16'' Std | 21 | 13-3/4 | 8 | 10-7/8 | 788 |
| 11 | 5,000 | 8-5/8 | 2'' LP | 17-7/8 | 11-3/4 | 8 | 10-7/8 | 740 |
| 11 | 3,000 | 9-5/8 | 2-1/16'' Std | 19 | 11 | 9 | 10-7/8 | 726 |
| 11 | 3,000 | 9-5/8 | 2'' LP | 17-7/8 | 11-3/4 | 9 | 10-7/8 | 571 |
| 11 | 5,000 | 9-5/8 | 2-1/16'' Std | 21 | 13-3/4 | 9 | 10-7/8 | 915 |
| 11 | 5,000 | 9-5/8 | 2'' LP | 20-1/2 | 11-3/4 | 9 | 10-7/8 | 760 |
| 11 | 3,000 | 10-3/4 | 2'' LP | 17-7/8 | 11-3/4 | 10 | 10-7/8 | 563 |
| 13-5/8 | 3,000 | 11-3/4 | 2'' LP | 18 | 11 | 11 | 13-1/2 | 638 |
| 13-5/8 | 3,000 | 13-3/8 | 2'' LP | 20-7/8 | 13 | 12-1/2 | 13-1/2 | 638 |
| 13-5/8 | 3,000 | 13-3/8 | 2-1/16'' Std | 19 | 12 | 12-1/2 | 13-1/2 | 744 |
| 13-5/8 | 5,000 | 13-3/8 | 2-1/16'' Std | 20-1/2 | 12-1/2 | 12-1/2 | 13-1/2 | 1250 |
| 13-5/8 | 5,000 | 13-3/8 | 2'' LP | 19 | 12 | 12-1/2 | 13-1/2 | 1078 |
| 20-3/4 | 3,000 | 20 | 2'' LP | 19 | 12 | 19-1/8 | 20-1/8 | 1540 |
| 21-1/4 | 2,000 | 20 | 2'' LP | 19 | 12 | 19-1/8 | 20-1/8 | 1232 |





## NW29 Casing Head

NW-29 casing heads are based on the same reliable design as the NW-22 with exception that the bowl is longer,which permits the acceptance of the minium deflection NW-29 casing hanger with larger load capacity for deeper drilling.

| Flange Size | Working Pressure | Casing Size | Outlets | A | B | C D | Weight | |
|---|---|---|---|---|---|---|---|---|
| in | psi | in | | in | in | in | in | lb |
| 11 | 3,000 | 8-5/8 | 2-1/16'' Std | 21 | 13 | 8 | 10-7/8 | 785 |
| 11 | 3,000 | 8-5/8 | 2'' LP | 20-1/2 | 13-5/8 | 8 | 10-7/8 | 644 |
| 11 | 5,000 | 8-5/8 | 2-1/16'' Std | 21-1/2 | 14-1/4 | 8 | 10-7/8 | 799 |
| 11 | 5,000 | 8-5/8 | 2'' LP | 20-1/2 | 14-1/4 | 8 | 10-7/8 | 793 |
| 11 | 3,000 | 9-5/8 | 2-1/16'' Std | 21 | 13 | 9 | 10-7/8 | 760 |
| 11 | 3,000 | 9-5/8 | 2'' LP | 20-1/2 | 13-5/8 | 9 | 10-7/8 | 623 |
| 11 | 5,000 | 9-5/8 | 2-1/16'' Std | 21-1/2 | 14-1/4 | 9 | 10-7/8 | 926 |
| 11 | 5,000 | 9-5/8 | 2'' LP | 20-1/2 | 14-1/4 | 9 | 10-7/8 | 758 |
| 11 | 3,000 | 10-3/4 | 2'' LP | 19-1/4 | 13-1/8 | 10 | 10-7/8 | 575 |
| 13-5/8 | 3,000 | 11-3/4 | 2'' LP | 20-7/8 | 13 | 11 | 13-1/2 | 695 |
| 13-5/8 | 3,000 | 13-3/8 | 2'' LP | 20-7/8 | 13 | 12-9/16 | 13-1/2 | 641 |
| 13-5/8 | 3,000 | 13-3/8 | 2-1/16'' Std | 21-1/2 | 14-1/2 | 12-1/2 | 13-1/2 | 794 |
| 13-5/8 | 5,000 | 13-3/8 | 2-1/16'' Std | 22-1/2 | 14-1/2 | 12-1/2 | 13-1/2 | 1328 |
| 13-5/8 | 5,000 | 13-3/8 | 2'' LP | 20-7/8 | 13 | 12-1/2 | 13-1/2 | 1113 |
| 20-3/4 | 3,000 | 20 | 2'' LP | 20-1/2 | 12-3/4 | 19-1/8 | 20-1/8 | 1606 |
| 21-1/4 | 2,000 | 20 | 2'' LP | 20-1/2 | 12-3/4 | 19-3/16 | 20-1/8 | 1278 |

## NW-21 Caing Hanger

NW-21 is a slip type,wrap-around hanger for shallow wells with light casing loads(maximum working pressure is 5000psi).The NH packoff is designed to be installed afer slips are landed and casing has been suspended and cut off. The NH packoff serves as the primary seal and protects the slips from test pressure.The NH packoff can't be used in a casing head or casing spool with lock screws,the lock screws intersect OD seal of the packoff. The hanger is capable of supporting up to 50% of the pipe body yield at rating temperatures

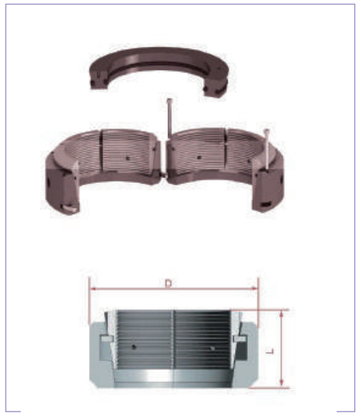


| Flange Size | Casing Size | D | L | Weight |
|---|---|---|---|---|
| in | in | in | in | lb |
| 11 | 4-1/2 | 10-13/16 | 4-1/16 | 94 |
| 11 | 5-1/2 | 10-13/16 | 4-7/16 | 85 |
| 11 | 7 | 10-13/16 | 4-15/32 | 67 |
| 11 | 7-5/8 | 10-13/16 | 4-13/16 | 63 |
| 13-5/8 | 4-1/2 | 13-7/16 | 4-3/16 | 175 |
| 13-5/8 | 5-1/2 | 13-7/16 | 4-3/16 | 145 |
| 13-5/8 | 7 | 13-7/16 | 4-3/16 | 123 |
| 13-5/8 | 7-5/8 | 13-7/16 | 4-3/16 | 118 |
| 13-5/8 | 8-5/8 | 13-7/16 | 4-3/16 | 99 |
| 13-5/8 | 9-5/8 | 13-7/16 | 4-3/16 | 82 |
| 13-5/8 | 9-7/8 | 13-7/16 | 4-3/16 | 80 |
| 13-5/8 | 10-3/4 | 13-7/16 | 4-3/16 | 75 |
| 16-3/4 | 9-5/8 | 16-9/16 | 5-3/8 | 216 |
| 16-3/4 | 9-7/8 | 16-9/16 | 5-3/8 | 210 |
| 16-3/4 | 10-3/4 | 16-9/16 | 5-3/8 | 189 |
| 16-3/4 | 11-3/4 | 16-9/16 | 5-3/8 | 172 |
| 16-3/4 | 13-3/8 | 16-9/16 | 5-3/8 | 121 |
| 20-3/4 | 10-3/4 | 20-1/16 | 5-3/8 | 341 |
| 20-3/4 | 13-3/8 | 20-1/16 | 5-3/8 | 283 |
| 20-3/4 | 16 | 20-1/16 | 5-3/8 | 174 |
| 21-1/4 | 13-3/8 | 20-1/16 | 5-3/8 | 283 |

## NW-22 Casing Hanger

The NW-22 casing hanger is a slip style,wrap-around hanger with an automatic packoff sealing.When the casing load is suspended,the packoff automatically seals the casing annulus below the slips.Maximum working pressure 10,000 psi.The hanger is capable of supporting up to 50% of the pipe body yield at rating temperatures.

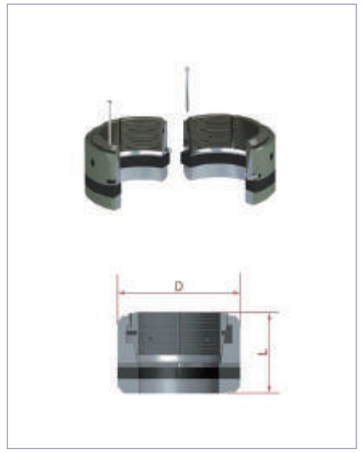


| Flange Size | Casing Size | D | L | Weight |
|---|---|---|---|---|
| in | in | in | in | lb |
| 11 | 4-1/2 | 10-13/16 | 8-7/8 | 120 |
| 11 | 5-1/2 | 10-13/16 | 8-7/8 | 107 |
| 11 | 7 | 10-13/16 | 8-7/8 | 90 |
| 11 | 7-5/8 | 10-13/16 | 8-7/8 | 72 |
| 13-5/8 | 5-1/2 | 13-7/16 | 8-7/8 | 192 |
| 13-5/8 | 7 | 13-7/16 | 8-7/8 | 182 |
| 13-5/8 | 7-5/8 | 13-7/16 | 8-7/8 | 168 |
| 13-5/8 | 8-5/8 | 13-7/16 | 8-7/8 | 150 |
| 13-5/8 | 9-5/8 | 13-7/16 | 8-7/8 | 130 |
| 13-5/8 | 9-7/8 | 13-7/16 | 8-7/8 | 124 |
| 13-5/8 | 10-3/4 | 13-7/16 | 8-7/8 | 109 |
| 16-3/4 | 9-5/8 | 16-9/16 | 9 | 359 |
| 16-3/4 | 9-7/8 | 16-9/16 | 9 | 316 |
| 16-3/4 | 10-3/4 | 16-9/16 | 9 | 306 |
| 16-3/4 | 11-3/4 | 16-9/16 | 9 | 294 |
| 16-3/4 | 13-3/8 | 16-9/16 | 9 | 280 |
| 20-3/4 | 10-3/4 | 20-1/16 | 9 | 420 |
| 20-3/4 | 13-3/8 | 20-1/16 | 9 | 388 |
| 20-3/4 | 16 | 20-1/16 | 9 | 360 |
| 21-1/4 | 13-3/8 | 20-1/16 | 9 | 401 |





## NW22-H Casing Hanger

The NW22-H type casing hanger is a wrap-around,slip style, non-automatic for shallow wells with light casing loads(Maximum working pressure 10,000 psi).It is ideal for use where casing weight is insufficient to energize the hanger seal.The seal is mechanically energized by cap screws.The hanger is capable of supporting up to 50% of the pipe body yield at temperatures,and it is commonly used above mudline systems.

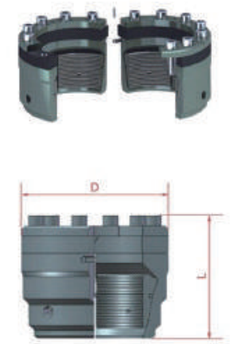


| Flange Size | Casing Size | D | L | Weight |
|---|---|---|---|---|
| in | in | in | in | lb |
| 11 | 5-1/2 | 10-13/16 | 9-1/8 | 137 |
| 11 | 7 | 10-13/16 | 9-1/8 | 106 |
| 13-5/8 | 9-5/8 | 13-1/2 | 9-1/8 | 148 |
| 13-5/8 | 10-3/4 | 13-1/2 | 9 | 110 |
| 20-3/4 | 13-3/8 | 20 | 9-1/8 | 392 |

## NW-29 Caing Hanger

NW-29 casing hanger is a slip style, wrap-around hanger with an automatically energized annular seal.The hanger is capable of supporting up to 80% of the pipe body yield at rating temperatures.The hanger provides minimum casing deflection and a hanging capacity that surpasses the capacity of the NW-21 and NW-22 casing hangers.When the upper slips move down and energize the packoff, the un-tapered lower slips engage automatically and apply controlled compression around the pipe.The lower slips do not move down,thus they do not create a high compressive force,as do conventional tapered slips.

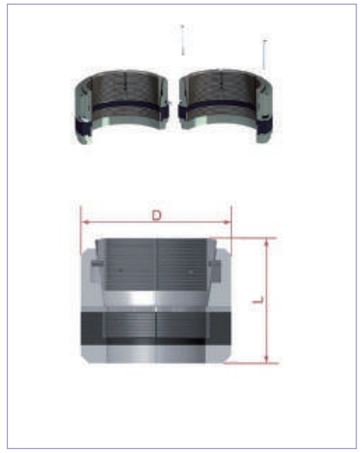


| Flange Size | Casing Size | D | L | Weight |
|---|---|---|---|---|
| in | in | in | in | lb |
| 11 | 4-1/2 | 10-13/16 | 8-7/8 | 120 |
| 11 | 5-1/2 | 10-13/16 | 8-7/8 | 107 |
| 11 | 7 | 10-13/16 | 8-7/8 | 90 |
| 11 | 7-5/8 | 10-13/16 | 8-7/8 | 72 |
| 13-5/8 | 4-1/2 | 13-7/16 | 8-7/8 | 199 |
| 13-5/8 | 5-1/2 | 13-7/16 | 8-7/8 | 192 |
| 13-5/8 | 7 | 13-7/16 | 8-7/8 | 182 |
| 13-5/8 | 7-5/8 | 13-7/16 | 8-7/8 | 168 |
| 13-5/8 | 8-5/8 | 13-7/16 | 8-7/8 | 150 |
| 13-5/8 | 9-5/8 | 13-7/16 | 8-7/8 | 130 |
| 13-5/8 | 9-7/8 | 13-7/16 | 8-7/8 | 124 |
| 13-5/8 | 10-3/4 | 13-7/16 | 8-7/8 | 109 |
| 16-3/4 | 9-5/8 | 16-9/16 | 8-7/8 | 359 |
| 16-3/4 | 9-7/8 | 16-9/16 | 8-7/8 | 316 |
| 16-3/4 | 10-3/4 | 16-9/16 | 8-7/8 | 306 |
| 16-3/4 | 11-3/4 | 16-9/16 | 8-7/8 | 294 |
| 16-3/4 | 13-3/8 | 16-9/16 | 8-7/8 | 280 |
| 20-3/4 | 10-3/4 | 20-1/16 | 8-7/8 | 420 |
| 20-3/4 | 13-3/8 | 20-1/16 | 8-7/8 | 388 |
| 20-3/4 | 16 | 20-1/16 | 8-7/8 | 360 |
| 21-1/4 | 13-3/8 | 20-1/16 | 8-7/8 | 419 |





## W Casing Hanger

The type W casing hanger is a wrap-around,slip-type,weight-set hanger. It may be installed through the BOP and is suitable for heavy casing loads.The hanger supports casing weight and seals the annulus before the BOP is removed. Weight is supported on a solid shoulder not on seal -therefore,it will not over-compress the seal. the upper body diameter is larger to centralize and protect seals.

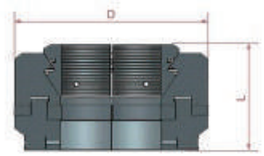


| Flange Size | Casing Size |
|---|---|
| in | in |
| 11 | 4-1/2 |
| 11 | 5 |
| 11 | 5-1/2 |
| 11 | 6-5/8 |
| 11 | 7 |
| 11 | 7-5/8 |
| 11 | 7-3/4 |
| 13-5/8 | 4-1/2 |
| 13-5/8 | 5 |
| 13-5/8 | 5-1/2 |
| 13-5/8 | 7 |
| 13-5/8 | 7-5/8 |
| 13-5/8 | 8-5/8 |
| 13-5/8 | 9-5/8 |
| 13-5/8 | 9-7/8 |
| 13-5/8 | 10-3/4 |
| 16-3/4 | 9-5/8 |
| 16-3/4 | 9-7/8 |
| 16-3/4 | 10-3/4 |
| 16-3/4 | 11-3/4 |
| 16-3/4 | 13-3/8 |
| 20-3/4 | 13-3/8 |
| 20-3/4 | 16 |

## WE Casing Hanger

The type WE casing hanger is a wrap-around,slip-type hanger.The hanger is capable of supporting heavy casing loads,and is used when the annulus seal is required independent of casing load.The hanger is installed at the casing head or spool.The elastomer seal is mechanically by cap screws.This hanger is used commonly above mudline systems.

| Flange Size | Casing Size |
|---|---|
| in | in |
| 11 | 4-1/2 |
| 11 | 5 |
| 11 | 5-1/2 |
| 11 | 6-5/8 |
| 11 | 7 |
| 11 | 7-5/8 |
| 11 | 7-3/4 |
| 13-5/8 | 4-1/2 |
| 13-5/8 | 5 |
| 13-5/8 | 5-1/2 |
| 13-5/8 | 7 |
| 13-5/8 | 7-5/8 |
| 13-5/8 | 8-5/8 |
| 13-5/8 | 9-5/8 |
| 13-5/8 | 9-7/8 |
| 13-5/8 | 10-3/4 |
| 16-3/4 | 9-5/8 |
| 16-3/4 | 9-7/8 |
| 16-3/4 | 10-3/4 |
| 16-3/4 | 11-3/4 |
| 16-3/4 | 13-3/8 |
| 20-3/4 | 13-3/8 |
| 20-3/4 | 16 |





## Mandrel Casing Hanger

The caing hanger ia a mandrel style,medium capacity.Hanger used in most service conditions.The Hanger is used in the NW bowl profile and utilizes radially energized elastomer body seals to affect a positive annular seal. The Hanger neck is the same diameter as the casing it suspends, it therefore can be used with a standard secondary seal.

| Flange Size | Casing Size |
|---|---|
| in | in |
| 11 | 4-1/2 |
| 11 | 5 |
| 11 | 5-1/2 |
| 11 | 6-5/8 |
| 11 | 7 |
| 11 | 7-5/8 |
| 11 | 7-3/4 |
| 13-5/8 | 4-1/2 |
| 13-5/8 | 5 |
| 13-5/8 | 5-1/2 |
| 13-5/8 | 7 |
| 13-5/8 | 7-5/8 |
| 13-5/8 | 8-5/8 |
| 13-5/8 | 9-5/8 |
| 13-5/8 | 9-7/8 |
| 13-5/8 | 10-3/4 |
| 16-3/4 | 9-5/8 |
| 16-3/4 | 9-7/8 |
| 16-3/4 | 10-3/4 |
| 16-3/4 | 11-3/4 |
| 16-3/4 | 13-3/8 |
| 20-3/4 | 13-3/8 |
| 20-3/4 | 16 |

## NW-22/NW-29 Casing Spool

The NW-22 casing spools are a straight bore bowl design. NW-22 Casing spools provide interchangeability of casing hangers NW-22 and NW-21,If a bowl protector is required during the drilling process,using an NW-22-BP casing spool,including lock down screws in the upper flange would be recommended.Bottom preparation can be the "P"secondary seal type or the bit guide preparation type,as in the picture (NW-22-BG).The BG preparation allows the use of reducer busings "4-O" and "PE" (Pressure Energized).

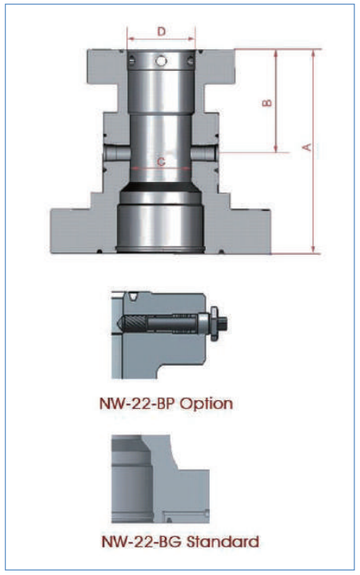


| Bottom Flange Size | Working Pressure | Top Flange Size | Working Pressure | Outlets | A | B | C | D | Weight |
|---|---|---|---|---|---|---|---|---|---|
| in | psi | in | psi | | in | in | in | in | lb |
| 11 | 3,000 | 11 | 3,000 | 2-1/16'' Std | 22-1/2 | 12-1/4 | 8 | 10-7/8 | 968 |
| 11 | 3,000 | 11 | 5,000 | 2-1/16'' Std | 24-1/4 | 14 | 8 | 10-7/8 | 1200 |
| 11 | 5,000 | 11 | 5,000 | 2-1/16'' Std | 26-1/4 | 12-7/8 | 8 | 10-7/8 | 1364 |
| 11 | 5,000 | 11 | 10,000 | 2-1/16'' Std | 26-7/8 | 13-1/2 | 8 | 10-7/8 | 2850 |
| 13-5/8 | 3,000 | 11 | 3,000 | 2-1/16'' Std | 22 | 12-7/8 | 9 | 10-7/8 | 1324 |
| 13-5/8 | 3,000 | 11 | 5,000 | 2-1/16'' Std | 19-13/16 | 10-7/8 | 9 | 10-7/8 | 1820 |
| 13-5/8 | 5,000 | 11 | 5,000 | 2-1/16'' Std | 25-5/8 | 13-3/8 | 9 | 10-7/8 | 1659 |
| 13-5/8 | 5,000 | 11 | 10,000 | 2-1/16'' Std | 25-1/2 | 13-1/4 | 9 | 10-7/8 | 2950 |
| 20-3/4 | 3,000 | 11 | 3,000 | 2-1/16'' Std | 21-1/2 | 10-5/8 | 10 | 10-7/8 | 2800 |
| 20-3/4 | 3,000 | 13-5/8 | 5,000 | 2-1/16'' Std | 23-1/4 | 9-3/4 | 12-5/8 | 13-1/2 | 3745 |
| 21-1/4 | 2,000 | 13-5/8 | 3,000 | 2-1/16'' Std | 23 | 10-1/2 | 12-1/2 | 13-1/2 | 2730 |
| 21-1/4 | 2,000 | 13-5/8 | 5,000 | 2-1/16'' Std | 26-13/16 | 13-3/8 | 12-1/2 | 13-1/2 | 2461 |

NW-29 casing spools are based on the same reliable design as the NW-22 with exception that the bowl is longer, which permits the acceptance of the minimum deflection NW-29 casing hanger with larger load capacity for deeper drilling.





NW secondary seals are available for all internal and external diameter sizes used in casing head spools and tubing head spools.

## PE Secondary Seal

For 10000 psi applications,the PE reducer busing can be installed in casing head spools NW-22 and NW -29 prepared with "BG" lower internal preparation. Reducer bushings are designed with a reduced internal diameter to serve as an integral bit guide.

| Flange Size | Working Pressure | Casing Size |
|---|---|---|
| in | in | |
| 11 | 10,000 | 4-1/2 |
| 11 | 10,000 | 5-1/2 |
| 11 | 10,000 | 7 |
| 11 | 10,000 | 7-5/8 |
| 13-5/8 | 10,000 | 8-5/8 |
| 13-5/8 | 10,000 | 9-5/8 |

## O-O Secondary Seal

The "OO" reducer busing is to be installed in casing or tubing head spools with integral "OO" lower internal connection.The busing is available for applications up to 5000 psi working pressure. Reducer bushings are designed with a reduced internal diameter to serve as an integral bit guide.

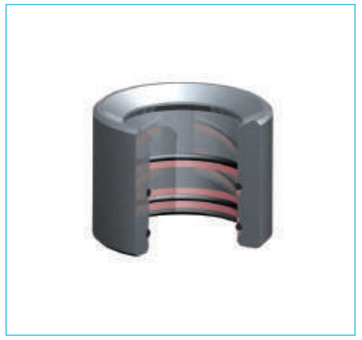

## 4-O Secondary Seal

The "4-O" reducer busing is to be installed in casing or tubing head spools with the "BG" lower internal connection. The busing is available for applications up to 5000 psi working pressure.Reducer bushings are designed with a reduced internal diameter to serve as an integral bit guide.

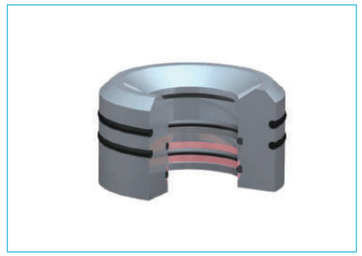

## P Secondary Seal

Double P Seals are ideal for use as crossovers where moderately severe service is expected.Double P Seals are sized to accommodate the tolerance range of casing and may be used on machined hanger necks.P seals are energized by means of injecting plastic packing through ports containing check valves, maintaining a constant pressure on the seal itself.It is avalible for applications up to 10000psi working pressure.

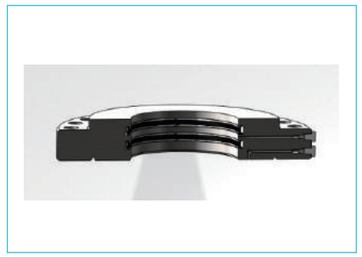

## CANH Metal Seal

CANH is a pressure assisted metal to metal sealing,It contains a inner seal ring and outer seal ring, and both seal ring with tapered sealing surface and four convex sealing nibs on the opposite surface.It is avalible for applications up to 20000psi working pressure.

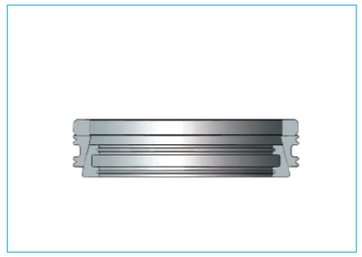





## TC1A Tubing Head

TC1A Tubing Heads are a straight bore bowl design which avoids damage to sealing areas by drilling tools,and prevents wedging of the tubing hangers,bowl protectors and test piugs. The secondary seal for the last casing pipe can be "P" seal type or the bit guide preparation type (TCM-BG),The BG preparation allows the use of reducer busings "4-O" and "PE" (Pressure Energized).The upper flange is supplied with lockdown screws for packoff re-nergization and tubing hanger retention.Side outlets are LP or studded type prepared with internal threads to install a valve removal plug when desired.The lower flange includes a grease fitting and orifice for testing of the secondary seal. The type of the tubing head that can orientate the tubing hanger is provided, if required.

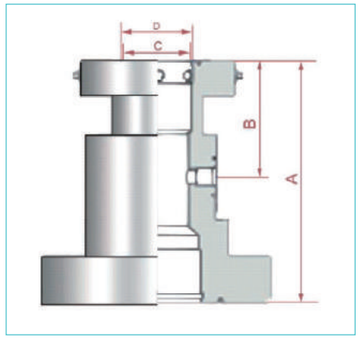


| Bottom Flange Size | Working Pressure | Top Flange Size | Working Pressure | Outlets | A | B | C | D | Weight |
|---|---|---|---|---|---|---|---|---|---|
| in | psi | in | psi | | in | in | in | in | lb |
| 7-1/16 | 3,000 | 11 | 3,000 | 2'' LP | 21-1/2 | 10-3/4 | 7 | 7-1/8 | 739 |
| 7-1/16 | 3,000 | 11 | 3,000 | 2-1/16'' Std | 21-1/2 | 10-3/4 | 7 | 7-1/8 | 770 |
| 7-1/16 | 5,000 | 11 | 3,000 | 2-1/16'' Std | 22-1/4 | 11-3/4 | 7 | 7-1/8 | 717 |
| 7-1/16 | 5,000 | 11 | 5,000 | 2-1/16'' Std | 24-1/2 | 11-3/4 | 7 | 7-1/8 | 981 |
| 7-1/16 | 10,000 | 11 | 5,000 | 2-1/16'' Std | 25 | 12-1/4 | 7 | 7-1/8 | 1144 |
| 7-1/16 | 10,000 | 11 | 10,000 | 1-13/16'' Std | 25-1/2 | 11-3/4 | 7 | 7-1/8 | 1351 |
| 11 | 3,000 | 13-5/8 | 3,000 | 2-1/16'' Std | 23-1/4 | 12-3/8 | 10 | 10-7/8 | 855 |
| 11 | 5,000 | 11 | 5,000 | 2-1/16'' Std | 26-1/2 | 13-1/4 | 8-1/2 | 10-7/8 | 800 |
| 11 | 5,000 | 13-5/8 | 5,000 | 2-1/16'' Std | 26 | 13-5/8 | 10 | 10-7/8 | 1595 |
| 11 | 10,000 | 11 | 10,000 | 2-1/16'' Std | 26 | 13 | 11 | 10-7/8 | - |
| 11 | 10,000 | 13-5/8 | 5,000 | 1-13/16'' Std | 29-3/8 | 15 | 10-7/8 | 10-7/8 | 1351 |

## TC1A-EN Tubing Hanger

TC1A-EN tubing hanger is an extended neck and threaded single completion tubing hanger, sealing the annular space by compression which is energized by lock down screws in the TC1A tubing head.The upper part of the extended neck has "S"type spring seals or O ring to pack against the internal diameter of the tubing head adapter,making a reliable and tested way to confine the well pressure.The TC1A-EN tubing hanger is used with the TC1A-EN tubing bonnet.

| Flange Size | Tubing Size |
|---|---|
| in | in |
| 7-1/16 | 2-3/8 |
| 7-1/16 | 2-7/8 |
| 7-1/16 | 3-1/2 |
| 7-1/16 | 4-1/2 |
| 11 | 2-7/8 |
| 11 | 3-1/2 |
| 11 | 4-1/2 |

## TC1A-CC Tubing Hanger

The TC1A-CC tubing hanger is arranged for a continuous control line,This allows more than one control line.This threaded mandrel hanger with "K" seals for annulus packoff amd an extended neck with "K" seals to packoff the tubing head adapter falnge.It has an back pressure valve thread.Other tubing thread sizes,including premium threads are avaliable upon request.

| Flange Size | Tubing Size |
|---|---|
| in | in |
| 7-1/16 | 2-3/8 |
| 7-1/16 | 2-7/8 |
| 7-1/16 | 3-1/2 |
| 11 | 2-7/8 |
| 11 | 3-1/2 |
| 11 | 4-1/2 |

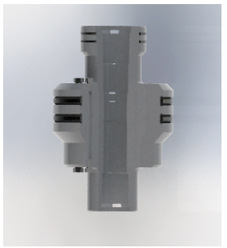

## TC1A-CH Tubing Hanger

The TC1A-CH is same as TC1A-EN but is arranged for a maximum of one control line up to 3/8"OD,which is terminated at the bottom of the hanger.The TC1A-CH hanger is made to work in conjunction with the TC1A-CL tubing bonnet.

| Flange Size | Tubing Size |
|---|---|
| in | in |
| 7-1/16 | 2-3/8 |
| 7-1/16 | 2-7/8 |
| 7-1/16 | 3-1/2 |
| 11 | 2-7/8 |
| 11 | 3-1/2 |
| 11 | 4-1/2 |

## ESP Tubing Hanger

The TC ESP hanger is dual-ported, with one port designed to accept a single production tubing string. The second port is designed to accommodate the electrical conductors that pass the current between the surface cable and the subsurface cable that goes to the pump.We standardized on EUE thread configurations. Nevertheless, additional thread profiles and different configurations can be supplied.

| Flange Size | Tubing Size |
|---|---|
| in | in |
| 11 | 3-1/2 |
| 11 | 4-1/2 |
| 13-5/8 | 7 |

## TC1W Wrap-around Tubing Hanger

TC1W is a slick-joint wrap-around tubing hanger which does not require a polished joint to slip over the tubing pipe inset.The seal between the pipe and the hanger is obtained by energizing the lockdown screws in the upper flange head.

| Flange Size | Tubing Size |
|---|---|
| in | in |
| 7-1/16 | 2-3/8 |
| 7-1/16 | 2-7/8 |
| 7-1/16 | 3-1/2 |
| 11 | 2-7/8 |
| 11 | 3-1/2 |
| 11 | 4-1/2 |

## BO-2 Tubing Hanger

A BO-2 coupling-type tubing hanger uses a one-piece coupling that is externally threaded with a coarse heavy-duty ACME thread. Internally the coupling will provide tubing threads in the top and bottom along with a back-pressure valve groove. The BO-2 coupling is attached to the last tubing joint and is run in conjunction with a TC1W wraparound-type packoff. Ultimately, the BO-2 coupling is made up into a BO-2 adapter that is assembled on the bottom of the Christmas tree.

| Flange Size | Tubing Size |
|---|---|
| in | in |
| 7-1/16 | 2-3/8 |
| 7-1/16 | 2-7/8 |
| 7-1/16 | 3-1/2 |
| 11 | 2-7/8 |
| 11 | 3-1/2 |
| 11 | 4-1/2 |

## TC1A/TC1A-B Tubing Hanger

TC1A is a threaded mandrel-type hanger,this hanger with an integral compression-type annulus seal that is actuated by string weight and or by lockdown screws.This hanger can be supplied with back-pressure valve threads.

| Flange Size | Tubing Size |
|---|---|
| in | in |
| 7-1/16 | 2-3/8 |
| 7-1/16 | 2-7/8 |
| 7-1/16 | 3-1/2 |
| 11 | 2-7/8 |
| 11 | 3-1/2 |
| 11 | 4-1/2 |

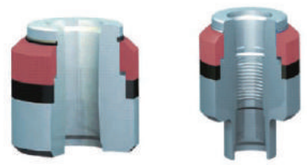

TC1A TC1B

## BMS Tubing Hanger

BMS tubing hanger is designed for high temperature and corrosive environments. The BMS hanger features the SRL Neck Seal and the metal body Seal.The maximum working pressure is 20000psi.The control line should be provided（continuous line）, if required.

| Flange Size | Tubing Size |
|---|---|
| in | in |
| 7-1/16 | 2-3/8 |
| 7-1/16 | 2-7/8 |
| 7-1/16 | 3-1/2 |
| 11 | 2-7/8 |
| 11 | 3-1/2 |
| 11 | 4-1/2 |

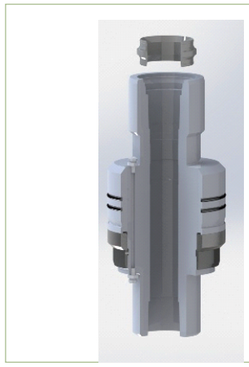





## TC-CL/TC-EN/TC-CC Adapter Bonnet

The TC-EN,TC-CL,and TC-CC tubing bonnets are designed to work in conjunction with the TC1A-EN,TC1A-CH,and TC1A-CC tubing hangers.The tubing bonnets fit over the extended neck tubing hangers to provide a radial sealing surface for the "S "type spring seals or O ring on the extended neck of the tubing hanger to seal in the tubing bonnet. The tubing bonnet is composed of an API thru-bolt bottom flange and a studded top flange,the bottom flanges have 1/2" test ports.The TC-CL tubing bonnet is arranged for a maximum of one control line, which is terminated at the bottom of the TC-CL body. The TC-CC is arranged for continuous control line hole,which enters the bottom of the body and exits the body through the 3/8"NPT connection. This bonnet can accommodate more than one control line.

| Bottom Flange | Working Pressure | Top Flange | Working Pressure | Tubing | Weight |
|---|---|---|---|---|---|
| in | psi | in | psi | in | lb |
| 7-1/16 | 3,000 | 2-1/16 | 3,000 | 2-3/8 | 275 |
| 7-1/16 | 3,000 | 2-9/16 | 3,000 | 2-7/8 | 275 |
| 7-1/16 | 3,000 | 3-1/8 | 3,000 | 3-1/2 | 275 |
| 7-1/16 | 3,000 | 3-1/8 | 5,000 | 3-1/2 | 275 |
| 7-1/16 | 5,000 | 2-1/16 | 5,000 | 2-3/8 | 300 |
| 7-1/16 | 5,000 | 2-9/16 | 5,000 | 2-7/8 | 300 |
| 7-1/16 | 5,000 | 3-1/8 | 5,000 | 3-1/2 | 300 |
| 7-1/16 | 10,000 | 2-1/16 | 10,000 | 2-3/8 | 450 |
| 7-1/16 | 10,000 | 2-9/16 | 10,000 | 2-7/8 | 450 |
| 7-1/16 | 10,000 | 3-1/16 | 10,000 | 3-1/2 | 625 |
| 11 | 3,000 | 2-1/16 | 5,000 | 2-1/8 | 575 |
| 11 | 3,000 | 2-9/16 | 5,000 | 2-7/8 | 575 |
| 11 | 3,000 | 3-1/8 | 5,000 | 3-1/2 | 575 |
| 11 | 5,000 | 2-1/16 | 5,000 | 2-3/8 | 675 |
| 11 | 5,000 | 2-9/16 | 5,000 | 2-7/8 | 675 |
| 11 | 5,000 | 3-1/8 | 5,000 | 3-1/2 | 675 |
| 11 | 10,000 | 2-1/16 | 10,000 | 2-3/8 | 975 |
| 11 | 10,000 | 2-9/16 | 10,000 | 2-7/8 | 950 |
| 11 | 10,000 | 3-1/16 | 10,000 | 3-1/2 | 1000 |

TC-CL

TC-EN

TC-CC

## B2P Adapter Bonnets

B2P tubing bonnets have API flanged bottom and studded/flange top connections,these bonnets have female sealing threads to suspend tubing over TC1W wrap around hanger packoff or can be used with the TC1A hanger.They are certified for use up to 5000 psi working pressure at -50°F to 250°F.

| Bottom Flange | Working Pressure | Top Flange | Working Pressure | Tubing | Weight |
|---|---|---|---|---|---|
| in | psi | in | psi | in | lb |
| 7-1/16 | 3,000 | 2-1/16 | 5,000 | 2-3/8 | 132 |
| 7-1/16 | 3,000 | 2-9/16 | 5,000 | 2-7/8 | 143 |
| 7-1/16 | 5,000 | 2-1/16 | 5,000 | 2-3/8 | 187 |
| 7-1/16 | 5,000 | 2-9/16 | 5,000 | 2-7/8 | 198 |

B2P

## BO2 Adapter Bonnets

BO-2 has an API flanged bottom and studded top connection.A socket in the lower bore consists of a support thread and a radial seal surface for the BO-2 coupling hanger , The coupling hanger has back-pressure valve preparation that provides well control until Christmas Tree is installed. BO-2 is certified for use up to 10000 psi at -50 °F to 250°F.

| Bottom Flange | Working Pressure | Top Flange | Working Pressure | Tubing | Weight |
|---|---|---|---|---|---|
| in | psi | in | psi | in | lb |
| 7-1/16 | 3,000 | 2-1/16 | 3,000 | 2-3/8 | 275 |
| 7-1/16 | 3,000 | 2-9/16 | 3,000 | 2-7/8 | 275 |
| 7-1/16 | 3,000 | 3-1/8 | 3,000 | 3-1/2 | 275 |
| 7-1/16 | 3,000 | 3-1/8 | 5,000 | 3-1/2 | 275 |
| 7-1/16 | 5,000 | 2-1/16 | 5,000 | 2-3/8 | 300 |
| 7-1/16 | 5,000 | 2-9/16 | 5,000 | 2-7/8 | 300 |
| 7-1/16 | 5,000 | 3-1/8 | 5,000 | 3-1/2 | 300 |
| 7-1/16 | 10,000 | 2-1/16 | 10,000 | 2-3/8 | 450 |
| 7-1/16 | 10,000 | 2-9/16 | 10,000 | 2-7/8 | 450 |
| 7-1/16 | 10,000 | 3-1/16 | 10,000 | 3-1/2 | 625 |
| 11 | 3,000 | 2-1/16 | 5,000 | 2-1/8 | 575 |
| 11 | 3,000 | 2-9/16 | 5,000 | 2-7/8 | 575 |
| 11 | 3,000 | 3-1/8 | 5,000 | 3-1/2 | 575 |
| 11 | 5,000 | 2-1/16 | 5,000 | 2-3/8 | 675 |
| 11 | 5,000 | 2-9/16 | 5,000 | 2-7/8 | 675 |
| 11 | 5,000 | 3-1/8 | 5,000 | 3-1/2 | 675 |
| 11 | 10,000 | 2-1/16 | 10,000 | 2-3/8 | 975 |
| 11 | 10,000 | 2-9/16 | 10,000 | 2-7/8 | 950 |
| 11 | 10,000 | 3-1/16 | 10,000 | 3-1/2 | 1000 |

BO-2





## B1 Adapter Bonnet

B1 Tubing bonnets have internal threads to suspend tubing or can be used with TC1W tubing hangers. B1 bonnets have threaded pin connections for the top sections of the wellhead. B1 adapters are availble in most sizes and pressure ranges.

| Bottom Flange | Working Pressure | Thread | Weight |
|---|---|---|---|
| in | psi | in | lb |
| 7-1/16 | 2,000 | 2-3/8 | 117 |
| 7-1/16 | 2,000 | 2-7/8 | 110 |
| 7-1/16 | 2,000 | 3-1/2 | 112 |
| 7-1/16 | 3,000 | 2-3/8 | 132 |
| 7-1/16 | 3,000 | 2-7/8 | 132 |
| 7-1/16 | 3,000 | 3-1/2 | 134 |
| 7-1/16 | 5,000 | 2-3/8 | 187 |
| 7-1/16 | 5,000 | 2-7/8 | 187 |
| 7-1/16 | 10,000 | 2-3/8 | 309 |
| 7-1/16 | 10,000 | 2-7/8 | 309 |

## ESP Adapter Bonnet

ESP adapters have seal bores to accommodate both a tubing hanger neck seal and an electrical power feed-thru device. Standard ESP adapters are equipped with rotating flanges to mate to the tubing head, minimizing concerns over alignment issues. Positive alignment can be obtained through the use of optional features in the mating ESP hanger.ESP adapters can be supplied to match standard tubing heads rated to 3,000 and 5,000 psi working pressure.

| Bottom Flange | Working Pressure | Top Flange | Working Pressure | Tubing | Weight |
|---|---|---|---|---|---|
| in | psi | in | psi | in | lb |
| 11 | 3,000 | 3-1/8 | 3,000 | 2-3/8 | 415 |

# Tee/Cross

| Bore | | Outlets | | A | B | C | D | Weight Tee | Weight Cross |
|---|---|---|---|---|---|---|---|---|---|
| in | psi | in | psi | in | in | in | in | lb | lb |
| 2-1/16 | 2,000 | 2-1/16 | 2,000 | 3.50 | 3.50 | 2.06 | 2.06 | 95 | 85 |
| 2-1/16 | 5,000 | 2-1/16 | 5,000 | 4.50 | 4.50 | 2.06 | 2.06 | 160 | 161 |
| 2-9/16 | 2,000 | 2-9/16 | 2,000 | 4.50 | 4.50 | 2.56 | 2.56 | 125 | 119 |
| 2-9/16 | 5,000 | 2-1/16 | 5,000 | 4.50 | 5.00 | 2.56 | 2.06 | 375 | 255 |
| 2-9/16 | 5,000 | 2-9/16 | 5,000 | 5.00 | 5.00 | 2.56 | 2.56 | 350 | 225 |
| 3-1/8 | 2,000 | 3-1/8 | 2,000 | 4.50 | 4.50 | 3.12 | 3.12 | 198 | 185 |
| 3-1/8 | 3,000 | 2-1/16 | 3,000 | 4.50 | 5.00 | 3.12 | 2.06 | 264 | 231 |
| 3-1/8 | 3,000 | 2-9/16 | 3,000 | 5.00 | 5.00 | 3.12 | 2.56 | 350 | 275 |
| 3-1/8 | 3,000 | 3-1/8 | 3,000 | 5.00 | 5.00 | 3.12 | 3.12 | 264 | 274 |
| 3-1/8 | 5,000 | 2-1/16 | 5,000 | 4.50 | 5.50 | 3.12 | 2.06 | 264 | 295 |
| 3-1/8 | 5,000 | 2-9/16 | 5,000 | 5.50 | 5.50 | 3.12 | 2.56 | 364 | 310 |
| 3-1/8 | 5,000 | 3-1/8 | 5,000 | 5.50 | 5.50 | 3.12 | 3.12 | 414 | 321 |
| 4-1/16 | 2,000 | 4-1/16 | 2,000 | 5.50 | 5.50 | 4.06 | 4.06 | 405 | 354 |
| 4-1/16 | 3,000 | 3-1/8 | 3,000 | 5.00 | 6.12 | 4.06 | 3.12 | 45 | 435 |
| 4-1/16 | 3,000 | 4-1/16 | 3,000 | 6.12 | 6.12 | 4.06 | 4.06 | 495 | 451 |
| 4-1/16 | 5,000 | 2-9/16 | 5,000 | 5.00 | 6.50 | 4.06 | 2.56 | 447 | 425 |
| 4-1/16 | 5,000 | 3-1/8 | 5,000 | 5.50 | 6.50 | 4.06 | 3.12 | 488 | 425 |
| 4-1/16 | 5,000 | 4-1/16 | 5,000 | 6.50 | 6.50 | 4.06 | 2.56 | 565 | 486 |
| 1-13/16 | 10,000 | 1-13/16 | 10,000 | 4.38 | 4.38 | 1.81 | 1.81 | 191 | 187 |
| 1-13/16 | 15,000 | 1-13/16 | 15,000 | 5.00 | 5.00 | 1.81 | 1.81 | 257 | 153 |
| 2-1/16 | 10,000 | 1-13/16 | 10,000 | 4.38 | 4.38 | 2.06 | 1.81 | 191 | 187 |
| 2-1/16 | 10,000 | 2-1/16 | 10,000 | 4.38 | 4.38 | 2.06 | 2.06 | 191 | 187 |
| 2-1/16 | 15,000 | 1-13/16 | 15,000 | 5.00 | 5.0 | 2.06 | 1.81 | 275 | 253 |
| 2-1/16 | 15,000 | 2-1/16 | 15,000 | 5.00 | 5.00 | 2.06 | 2.06 | 257 | 253 |
| 2-9/16 | 10,000 | 1-13/16 | 10,000 | 4.50 | 5.12 | 2.56 | 1.81 | 246 | 241 |
| 2-9/16 | 10,000 | 2-1/16 | 10,000 | 4.50 | 5.12 | 2.56 | 2.06 | 246 | 241 |
| 2-9/16 | 10,000 | 2-9/16 | 10,000 | 5.12 | 5.12 | 2.56 | 2.56 | 286 | 280 |
| 2-9/16 | 15,000 | 1-13/16 | 15,000 | 5.50 | 5.50 | 2.56 | 1.81 | 386 | 307 |
| 2-9/16 | 15,000 | 2-1/16 | 15,000 | 5.50 | 5.50 | 2.56 | 2.06 | 389 | 350 |
| 2-9/16 | 15,000 | 2-9/16 | 15,000 | 5.50 | 5.50 | 2.56 | 2.56 | 375 | 335 |
| 3-1/16 | 10,000 | 1-13/16 | 10,000 | 4.50 | 5.88 | 3.06 | 1.81 | 370 | 350 |
| 3-1/16 | 10,000 | 2-1/16 | 10,000 | 4.50 | 5.88 | 3.06 | 2.06 | 370 | 350 |
| 3-1/16 | 10,000 | 2-9/16 | 10,000 | 5.12 | 5.88 | 3.06 | 2.56 | 407 | 433 |
| 3-1/16 | 10,000 | 3-1/16 | 10,000 | 5.88 | 5.88 | 3.06 | 3.06 | 480 | 464 |
| 3-1/16 | 15,000 | 1-13/16 | 15,000 | 6.31 | 6.31 | 3.06 | 1.81 | 486 | 470 |
| 3-1/16 | 15,000 | 2-1/16 | 15,000 | 6.31 | 6.31 | 3.06 | 2.06 | 470 | 440 |
| 3-1/16 | 15,000 | 2-9/16 | 15,000 | 6.31 | 6.31 | 3.06 | 2.56 | 440 | 432 |
| 3-1/16 | 15,000 | 3-1/16 | 15,000 | 6.31 | 6.31 | 3.06 | 3.06 | 430 | 422 |

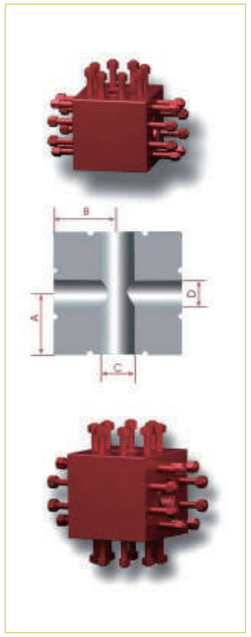




# Tree Cap

## Christmas Tree Cap

Christmas Tree Cap is a top connector which is used on the top of X-Mas Tree, It's main function is to provide access to the X-Mas Tree bore. It is basically consisting of a Flanged body, Blanking Plug, Hammer Nut as principal parts and seal ring as secondary parts. Blanking Plug has a provision to accommodate pressure gauge to ascertain inside pressure of the well. Inside of Flanged body is having API-UPTBG thread as lift thread.

| Flange | Working Pressure | Bore | Weight |
|---|---|---|---|
| in | psi | in | lb |
| 2-1/16 | 5,000 | 2-1/16 | 48 |
| 2-1/16 | 10,000 | 2-1/16 | 42 |
| 2-9/16 | 5,000 | 2-9/16 | 69 |
| 2-9/16 | 10,000 | 2-9/16 | 64 |
| 3-1/8 | 3,000 | 3-1/8 | 88 |
| 3-1/8 | 5,000 | 3-1/8 | 101 |
| 3-1/16 | 10,000 | 3-1/16 | 110 |
| 4-1/16 | 5,000 | 4-1/16 | 139 |
| 4-1/16 | 10,000 | 4-1/16 | 214 |

## Frac Head

| Bore(B) | | Outlets(A) | | Height(C) | Weight |
|---|---|---|---|---|---|
| in | psi | in | psi | in | lb |
| 4-1/16 | 10,000 | 4-1/16 | 10,000 | 20 | 1256 |
| 4-1/16 | 10,000 | 5-1/8 | 10,000 | 20 | 1500 |
| 4-1/16 | 10,000 | 7-1/16 | 10,000 | 22 | 2380 |
| 4-1/16 | 15,000 | 4-1/16 | 15,000 | 20 | 1680 |
| 4-1/16 | 15,000 | 5-1/8 | 15,000 | 23-7/8 | 2644 |

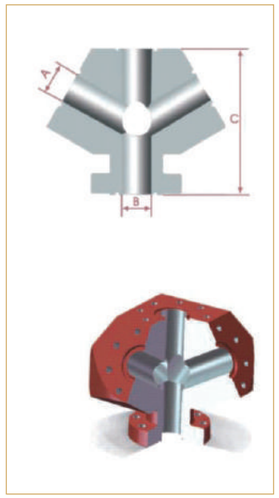

## Integral wellhead

The integral wellhead allows two layers of casing to be hung and sealed. Both layers of casing run through a single wellbore to drill and run, hang and seal the casing, eliminating the need for frequent removal and installation of the BOP, saving on costly rig runs.

## Features

- Flexible structure, multi - use fast card loading mechanism.
- Complete integration design to solve multiple emergency situations.
- Compared with conventional wellheads, this type of wellhead provides higher safety and saves installation time and labor costs.

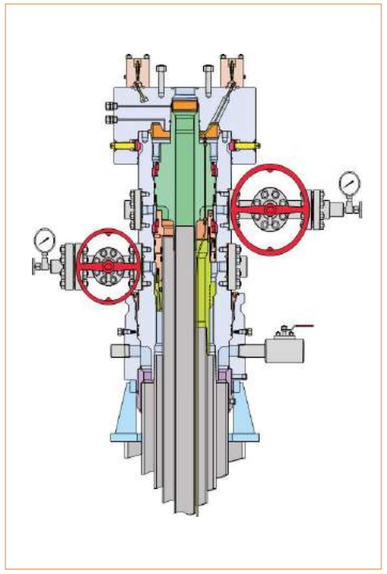

## Scope

| Application |
|---|
| Land and ocean drilling platforms |
| **Advantage** |
| API standard flange (quick fitting connector optional) |
| Staged drilling match |
| Extreme design pressure: 15,000psi |
| Operating temperature: -60℃~121℃ |
| Material Class: AA,BB,CC,DD,EE,FF,HH |
| Specification level: PSL1~3G |
| Performance level: PR1~2F |
| Mandrel hanger (slip hanger as emergency backup) |
| Standard installation tools |
| Rubber Seal (10,000 psl and up) |
| Metal seal (above 10,000 psi) |



Wellhead & Christmas Tree

## Multistage casing (tubing) wellhead system

The multistage casing (tubing) wellhead is a compact, integrated wellhead with fewer leaks that reduces time and optimizes operating costs by eliminating the need for frequent removal and installation of the BOP. It can be used as an alternative to traditional wellhead systems in onshore and offshore drilling and production platform applications.

## Features

- Modular design, compact structure, complete functions, easy installation and maintenance.
- The monolithic structure saves space and reduces external connections, which in turn reduces leaks.
- No internal cutting machine is used on site to cut casing, easy to operate.

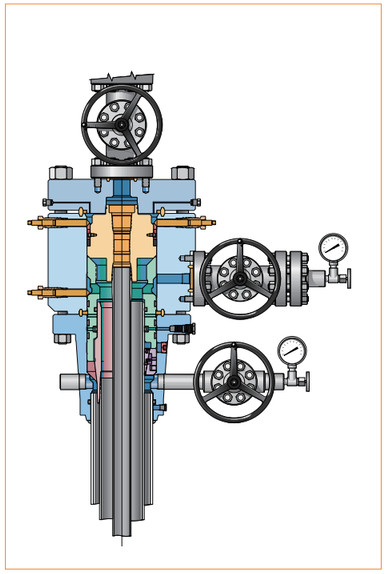

## Scope

| Application |
|---|
| Land and ocean drilling platforms |
| **Advantage** |
| API standard flange (quick fitting connector optional) |
| Staged drilling match |
| Extreme design pressure: 15,000psi |
| Operating temperature: -60℃~121℃ |
| Material Class: AA,BB,CC,DD,EE,FF,HH |
| Specification level: PSL1~3G |
| Performance level: PR1~2F |
| Mandrel hanger (slip hanger as emergency backup) |
| Standard installation tools |
| Rubber Seal (10,000 psl and up) |
| Metal seal (above 10,000 psi) |

NOE Conventional Wellhead Systems provide the flexibility, compatibility and interchangeability required for a wide range of surface applications. With the proven features of NOE systems comes reduced inventory requirements, lower costs and the ability to provide standard components. NOE has earned a reputation for quality wellhead products that meet or exceed API 6A specifications. NOE offers a complete line of conventional wellheads and christmas trees to suit all casing and tubing programs for working pressures up to 20,000psi. Equipment for surface applications ranges from low pressure, conventional equipment to systems for severe service and geothermal applications.

## Multi- Lateral Slim Twin Wellhead and ChristmasTree

NOE Conventional Wellhead Systems provide the flexibility, compatibility and interchangeability required for a wide range of surface applications. With the proven features of NOE systems comes reduced inventory requirements, lower costs and the ability to provide standard components. NOE has earned a reputation for quality wellhead products that meet or exceed API 6A specifications. NOE offers a complete line of conventional wellheads and christmas trees to suit all casing and tubing programs for working pressures up to 20,000psi. Equipment for surface applications ranges from low pressure, conventional equipment to systems for severe service and geothermal applications.

## Features

- Two separate wells inside a single conductor.
- Various casing / tubing strings in each well.
- Reduction of the number and size of platforms required for field development.
- Maximized use of single platform slots
- Major savings for the project (time and platform reduction).

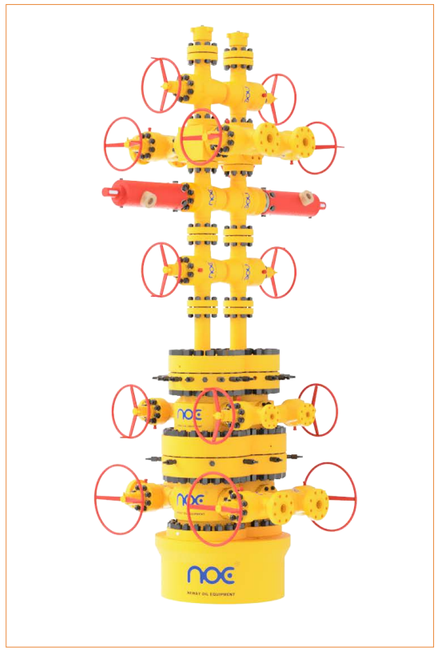

## Scope

| Item | Unitized |
|---|---|
| Conductor | 36'' |
| Surface Casings | 13-3/8'' |
| Completions | 5-1/2''~2-7/8'' |

# Surface Test Tree

## Features

- Adaptable and compact design provides added flexibility and mobitily.
- Low torque metal-to-metal sealing on all gate valves provides increased reliability and ease of operation.
- Hydraulic “failsafe” flow line valve with stem positioning indicator enhances safety.
- Protection frame on main block for manual and hydraulic valves improves durability.
- Swivel enables rotation of the test string for packer setting and disconnect operations.
- Transportation basket with four-point lifting sling and integral forklift pockets for protection during shipping and ease of handling.

## Scope

| Working Pressure | Size | | |
|---|---|---|---|
| psi | 3-1/16’’ | 4-1/16’’ | 5-1/8’’ |
| 3,000 | | | |
| 5,000 | | | |
| 10,000 | | | |
| 15,000 | | | |
| 20,000 | | | |

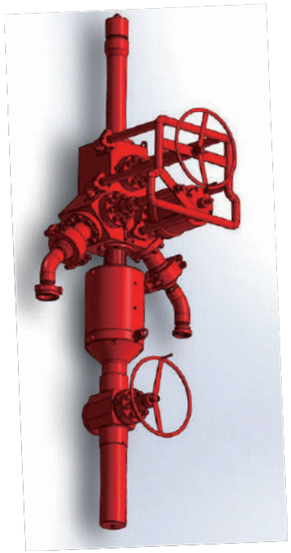



# Tools

## BPV

The Back Pressure Valve (BPV) is designed to block the pressure coming upstream from the well during the removal of the BOP and during the repair of the Christmas tree. It includes one-way BPV and two-way BPV.In most cases, you will use a one-way BPV, except when testing the BOP stack or the Christmas Tree.

| OD of thread(in) | 1-1/4 | 1-1/2 | 1-3/4 | 2 | 2-1/2 | 3 | 3-1/2 | 4 |
|---|---|---|---|---|---|---|---|---|
| | 4-3/32 | 4-1/4 | 4-3/8 | 5 | 6-1/6 | 6-1/8 | 6-5/16 | 6-3/8 |

## BPV lubricator

It can be used to run and retrieve back pressure valve(BPV).Uses pressure directly from the well and the pressure is balanced between the tool's upper and lower housing,the rod will move easily.

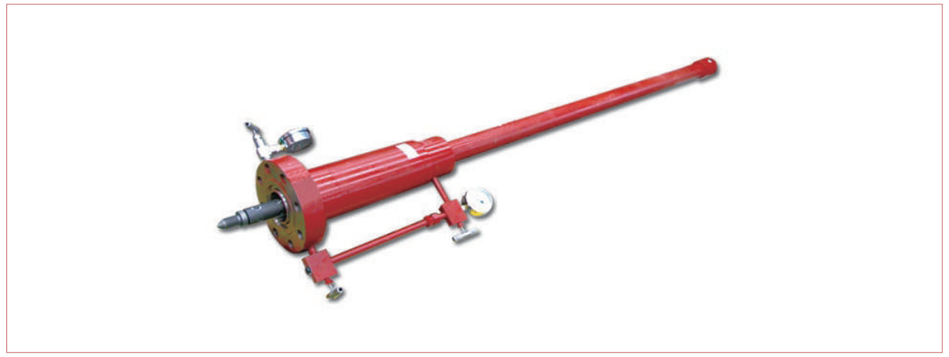

## VR plug and VR lubricator

- Lubricator installs VR plugs in casing head, casing spool or tubing head side outlets so gate valves can be isolated from pressure for removal or repair.
- For outlet working pressures of 15,000 psi, straight-thread VR plugs are standard. For lower working pressures,tapered-thread VR plugs are standard.
- All studded and flanged outlets on casing heads,casing spools and tubing heads are threaded to accept VR plugs.

| Maximum Working Pressure | OD of thread"A" | TPI |
|---|---|---|
| psi | in | ref. |
| 10,000 | 1.66 | 11-1/2 |
| | 1.9 | 11-1/2 |
| | 2-3/8 | 11-1/2 |
| | 2-7/8 | 11-1/2 |
| | 3-1/2 | 11-1/2 |
| 20,000 | 1-3/4 | 6 |
| | 2 | 6 |
| | 2-1/2 | 6 |
| | 3 | 6 |

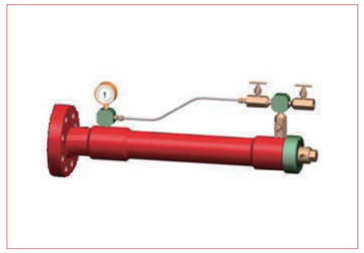

## Wear Bushing

- The Wear bushing is designed with J-slots to accept the lift lugs of the running tool. The running tool is installed into the wear bushing with clockwise rotation to engage the lift lugs into the J-slots.
- The wear bushing may be install into heads or spools with or without lockscrews. It is designed with a groove to allow lockscrews to be run in to prevent this rotation (where applicable).
- The Wear Bushing is available in all nominal sizes and bores as specified.

## Combination tool

- The Dovetail seal is a radially energized elastomer seal used in all test plugs.
- The Test plug is not designed to be used with lock screws.
- The Combination Tool is equipped with either box type 3-1/2" IF or 4-1/2" IF tool joint connections both top and bottom configuration.
- The Combination tool is also doubles as a wear bushing running tool when inverted. It equipped with four lift lugs, these lugs can use to run and retrieve wear bushing.

| Size | Pressure |
|---|---|
| in | psi |
| 7-1/16 | 2,000~15,000 |
| 9 | 2,000~15,000 |
| 11 | 2,000~15,000 |
| 13-5/8 | 2,000~15,000 |
| 16-3/4 | 2,000~5,000 |
| 20 | 2,000~5,000 |